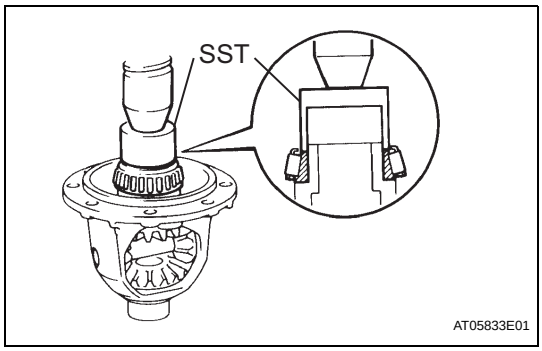

REASSEMBLY

1. INSTALL FRONT DRIVE PINION REAR TAPERED ROLLER BEARING

(a) Using SST and a press, install a new front drive pinion rear tapered roller bearing in to the differential case.
SST 09710-30031 (09710-03161)

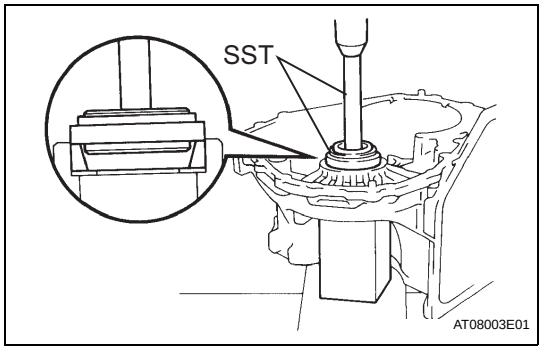

(b) Place the plate washer onto the transaxle case.

(c) Using SST and a press, press a new front drive pinion rear tapered roller bearing outer race in to the transaxle case.
SST 09350-32014 (09351-32111, 09351-32130)

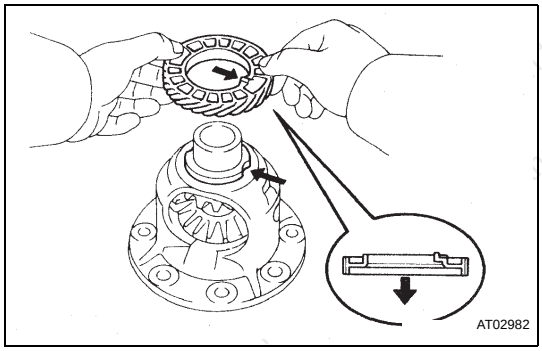

2. INSTALL FRONT DRIVE PINION FRONT TAPERED ROLLER BEARING

(a) Install the speedometer drive gear to the differential case.

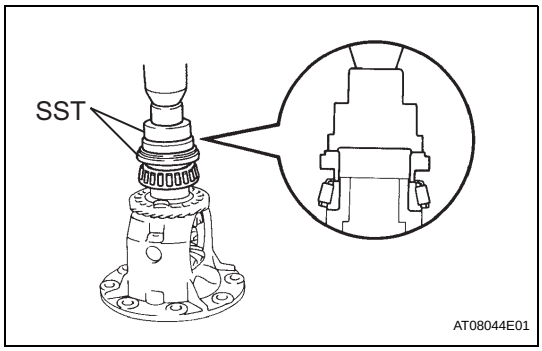

(b) Using SST and a press, install the new front drive pinion front tapered roller bearing in to the differential case.
SST 09350-32014 (09351-32090, 09351-32130)

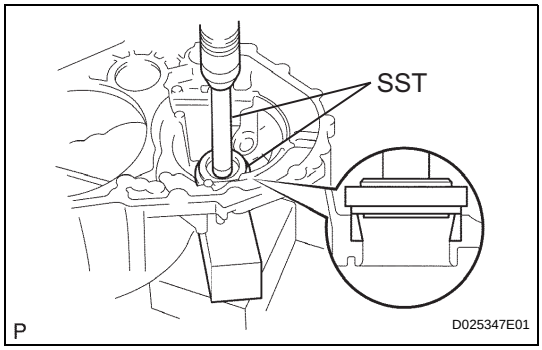

(c) Using SST and a press, press a new front drive pinion front tapered roller bearing outer race in to the transaxle housing.
SST 09350-32014 (09351-32111, 09351-32130)

this manual – you were scre
d more for free using BitTorrent!

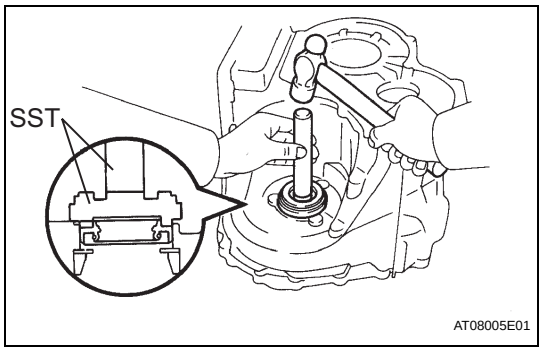

3. INSTALL TRANSAXLE CASE OIL SEAL

(a) Using SST and a hammer, drive in a new transaxle case oil seal.
SST 09350-32014 (09351-32111, 09351-32130)

(b) Coat the lip of transaxle case oil seal with MP grease.

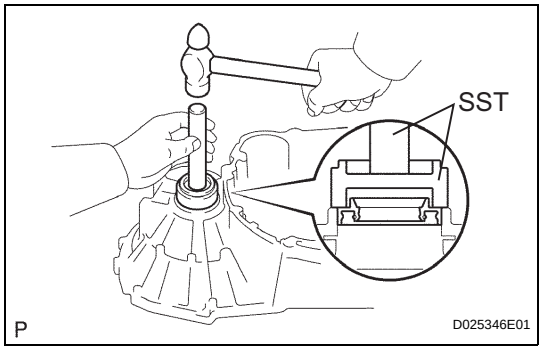

4. INSTALL TRANSAXLE HOUSING OIL SEAL

(a) Using SST and a hammer, drive in a new transaxle housing oil seal.
SST 09350-32014 (09351-32130, 09351-32150)

(b) Coat the lip of transaxle housing oil seal with MP grease.

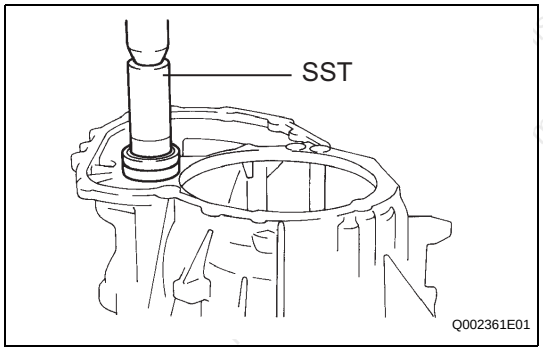

5. INSTALL UNDERDRIVE CYLINDRICAL ROLLER BEARING

(a) Using SST and a press, install the underdrive cylindrical roller bearing to the transaxle housing.
SST 09350-32014 (09351-32140)

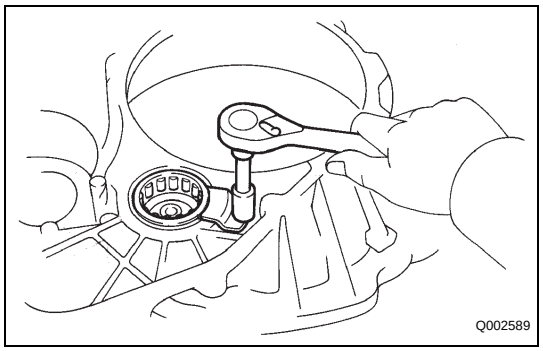

(b) Install the roller bearing retainer with a new seal washer and the bolt to the transaxle housing.
Torque: 17 N*m (173 kgf*cm, 13 ft.*lbf)

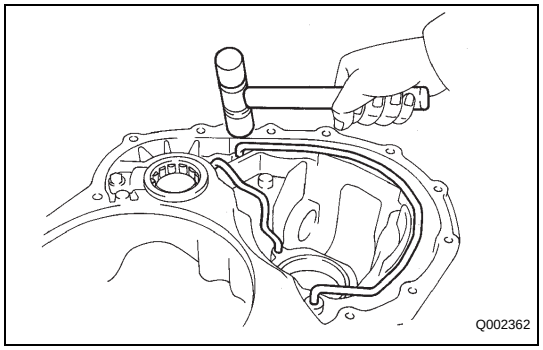

6. INSTALL DIFFERENTIAL GEAR LUBE APPLY TUBE

(a) Using a plastic hammer, install the differential gear lube apply tube to the transaxle housing.
NOTICE:
Be careful not to bend or damage the tube.

7. INSTALL TRANSMISSION LUBE APPLY TUBE

(a) Using a plastic hammer, install the transmission lube apply tube to the transaxle housing.
NOTICE:
Be careful not to bend or damage the tube.

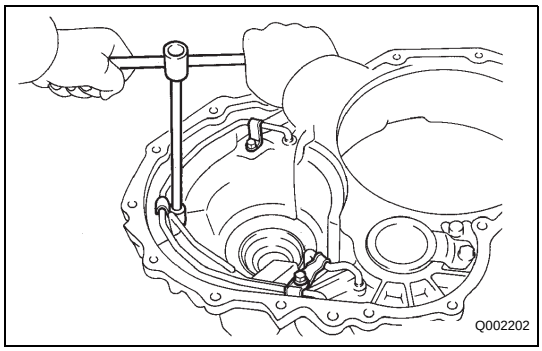

8. INSTALL TRANSAXLE APPLY TUBE CLAMP NO.2

(a) Install the transaxle apply tube clamp No. 2 with the bolt to the transaxle housing.
Torque: 5.5 N*m (56 kgf*cm, 49 in.*lbf)

9. INSTALL TRANSAXLE APPLY TUBE CLAMP NO.1

(a) Install the 2 transaxle apply tube clamps No. 1 with the 2 bolts to the transaxle housing.
Torque: 5.5 N*m (56 kgf*cm, 49 in.*lbf)

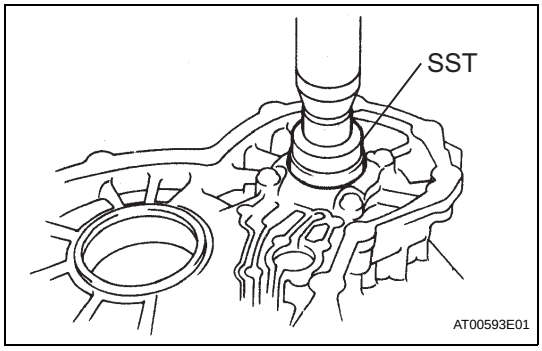

10. INSTALL COUNTER DRIVEN GEAR CYLINDRICAL ROLLER BEARING

(a) Using SST and a press, install the counter driven gear cylindrical roller bearing to the transaxle case.
SST 09350-32014 (09351-32090)

11. INSTALL TRANSMISSION CASE PLATE NO.3

(a) Install the transmission case plate No. 3 with the bolt to the transaxle case.
Torque: 10 N*m (102 kgf*cm, 7 ft.*lbf)

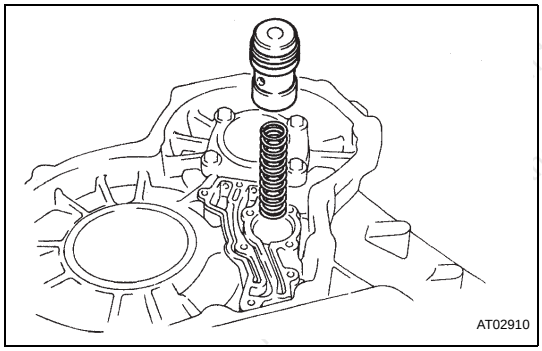

12. INSTALL B-4 ACCUMULATOR PISTON

(a) Coat a new O-ring with ATF and install them to the B-4 accumulator piston.
(b) Install the B-4 accumulator piston and compression spring to the transaxle case.

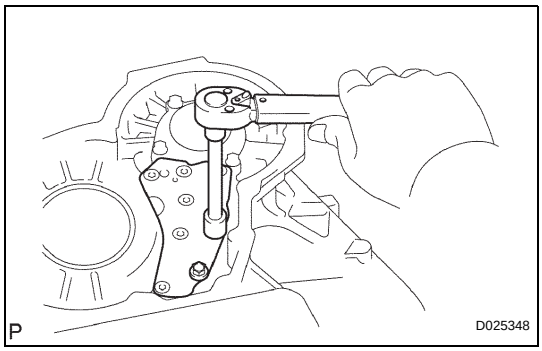

(c) Clean the threads of the screws and case with white gasoline.
(d) Install a new transmission case plate No. 2 gasket and transmission case plate No. 2 in place to the transaxle case.
(e) Install and tighten the 2 bolts.
Torque: 10 N*m (102 kgf*cm, 7 ft.*lbf)

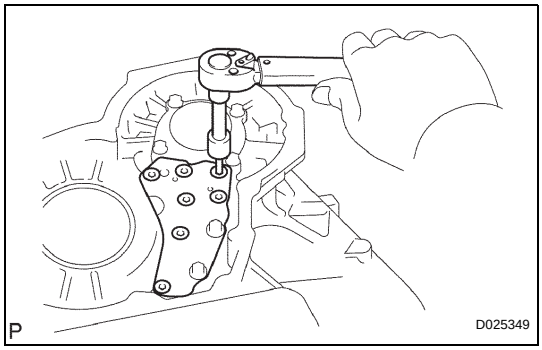

(f) Apply adhesive or equivalent to the 7 screws.
Adhesive:
Toyota Genuine Adhesive 1324, Three Bond 1324 or equivalent
(g) Using a "TORX" wrench, install the 7 screws.
Torque: 7.5 N*m (76 kgf*cm, 66 in.*lbf)

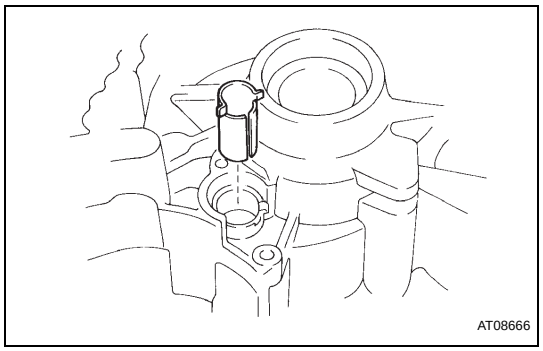

13. INSTALL CAM GUIDE SLEEVE

(a) Install the cam guide sleeve to the transaxle case.

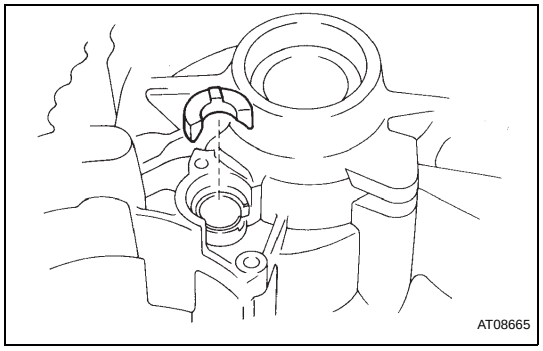

14. INSTALL PARKING LOCK SLEEVE

(a) Install the spring guide sleeve with the protruding portion facing up.

is manual – you were screwed!
more for free using BitTorrent!

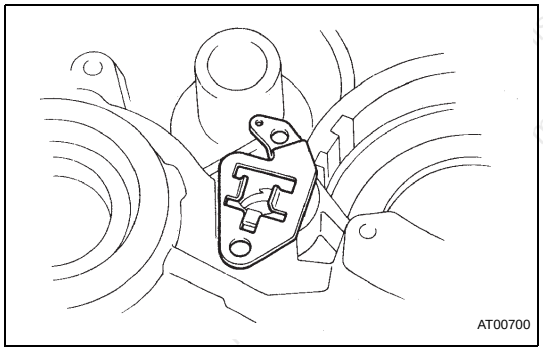

15. INSTALL PARKING LOCK PAWL

(a) Place the pawl stopper plate on the protruding portion of the lock sleeve to the transaxle case.

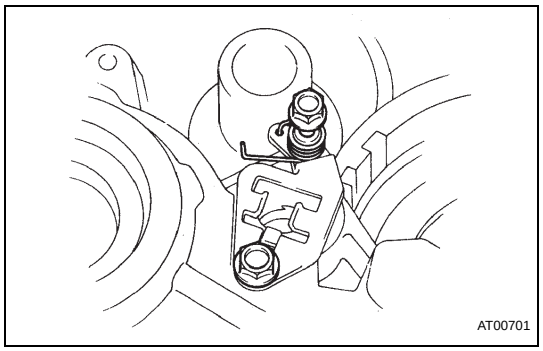

(b) Install the spring guide sleeve and torsion spring with the 2 bolts.
Torque: 13 N*m (130 kgf*cm, 9 ft.*lbf)

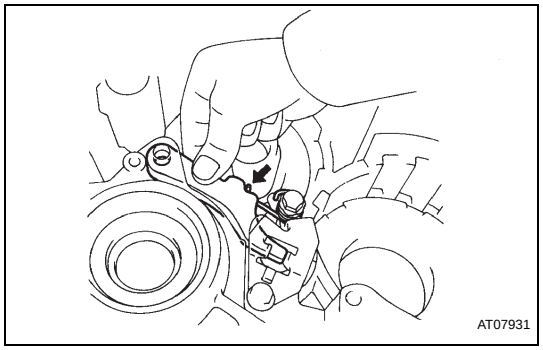

(c) Install the parking lock pawl to the transaxle case.

AX

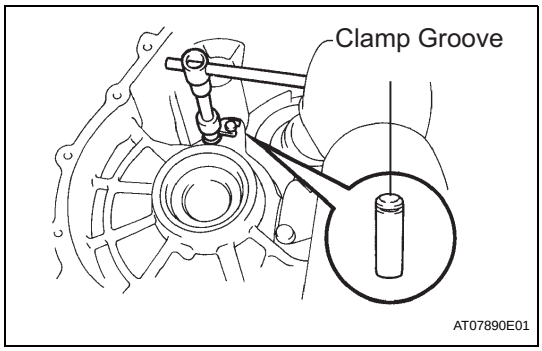

(d) Install the parking lock pawl shaft and pawl shaft clamp with a bolt.
Torque: 5.5 N*m (56 kgf*cm, 49 in.*lbf)

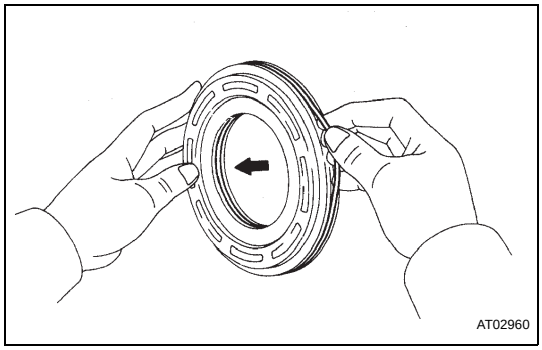

16. INSTALL UNDERDRIVE BRAKE PISTON

(a) Coast 2 new O-rings with ATF and Install the 2 O-rings to the underdrive brake piston.

this manual – you were screwed!
you more for free using BitTorrent!

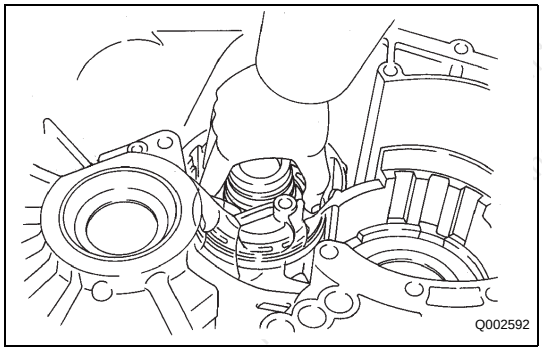

(b) Place the underdrive brake piston into the case with the cup side up, being careful not to damage the O-rings.

AX

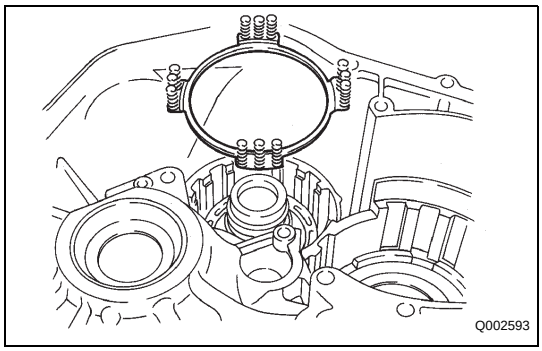

17. INSTALL UNDERDRIVE BRAKE RETURN SPRING SUB-ASSEMBLY

(a) Install the underdrive brake return spring sub-assembly to the transaxle case.

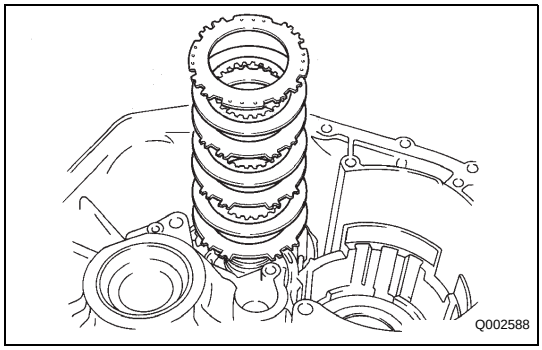

18. INSTALL UNDERDRIVE CLUTCH DISC NO.2

(a) Install the 3 plates, 3 underdrive clutch discs No. 2 and flange in order.
Install in order:
D = Disc P = Plate F = Flange
P - D - P - D - P - D - F
HINT:
Install the flange with the flat side facing downward.

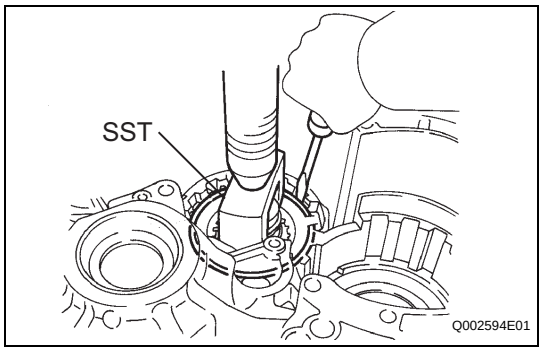

(b) Place SST on the flange, and compress the flange with a press.
SST 09350-32014 (09351-32070)

(c) Using a screwdriver, install the underdrive clutch flange No. 2 hole snap ring to the transaxle case.
HINT:
Be sure the end gap of the snap ring is not aligned with one of the cutouts.

19. INSPECT PACK CLEARANCE OF UNDERDRIVE BRAKE (See page AX-170)

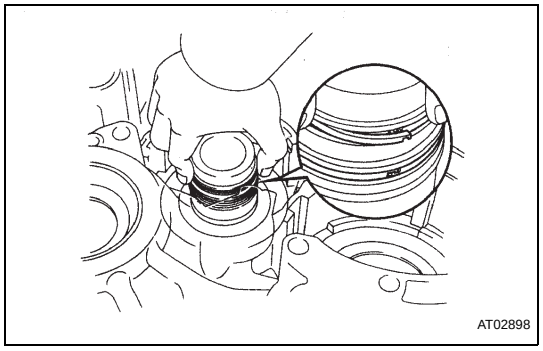

20. INSTALL OVERDRIVE CLUTCH DRUM OIL SEAL RING

(a) Coat 2 new overdrive clutch drum oil seal rings with ATF and install the 2 overdrive clutch drum oil seal rings to the transaxle case.

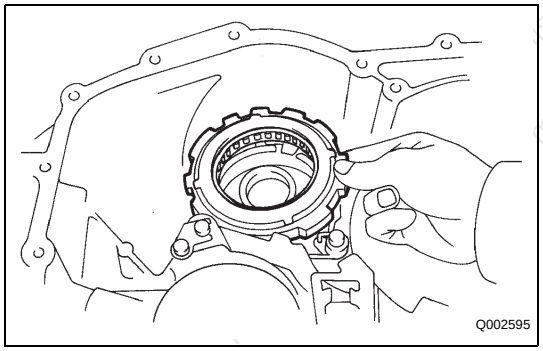

21. INSTALL UNDERDRIVE 1 WAY CLUTCH ASSEMBLY

(a) Install the underdrive 1 way clutch assembly to the transaxle case.

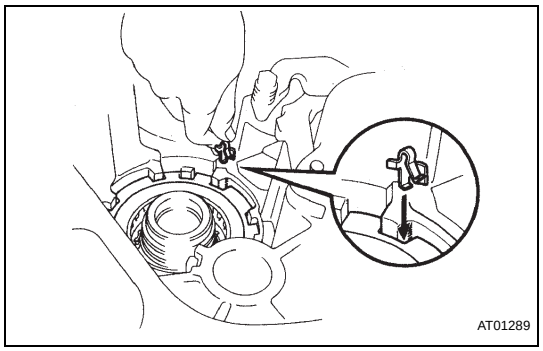

22. INSTALL UNDERDRIVE 1 WAY CLUTCH RETAINER

(a) In the place shown in the illustration (the space between the 1 way clutch outer race and case), push the underdrive 1 way clutch retainer in until you hear a "click".

23. INSTALL UNDERDRIVE CLUTCH DRUM SUB-ASSEMBLY

(a) Coat the underdrive clutch drum thrust washer with petroleum jelly and install it on to underdrive 1 way clutch assembly.

(b) Align the flukes of discs in the underdrive brake.

(c) Install the underdrive clutch drum sub-assembly.

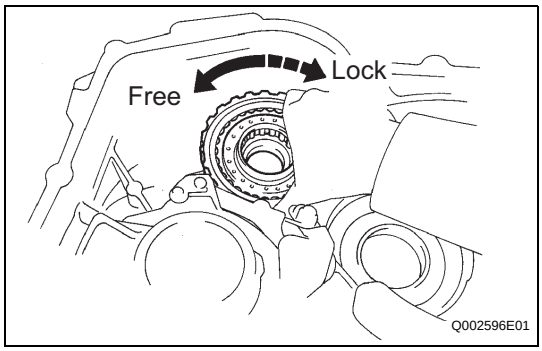

(d) Turn the underdrive clutch assembly. The clutch assembly should turn freely counterclockwise and should lock clockwise.

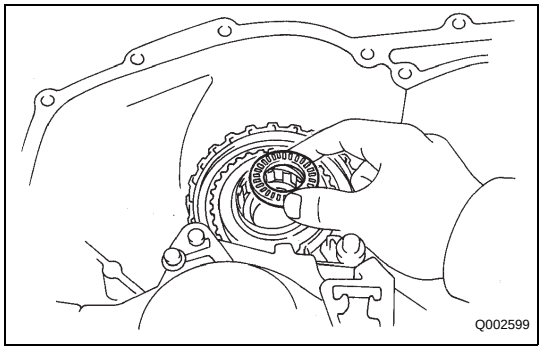

(e) Install the assembled bearing and race, with the thrust needle roller bearing facing upward.
Assembled bearing and race:
mm (in.)

	Outer diameter	Inner diameter
Assembled bearing and race	43.9 mm (1.728 in.)	31.0 mm (1.220 in.)

24. INSPECT HEIGHT OF CLUTCH ASSEMBLY (See page AX-170)

25. INSPECT PISTON STROKE OF UNDERDRIVE CLUTCH (See page AX-171)

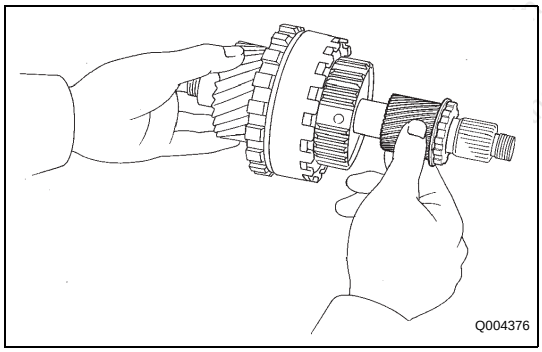

26. INSTALL UNDERDRIVE PLANETARY SUN GEAR SUB-ASSEMBLY

(a) Remove the underdrive planetary sun gear from the counter shaft assembly.
(b) Remove the underdrive input shaft needle roller bearing and underdrive input shaft thrust bearing race.

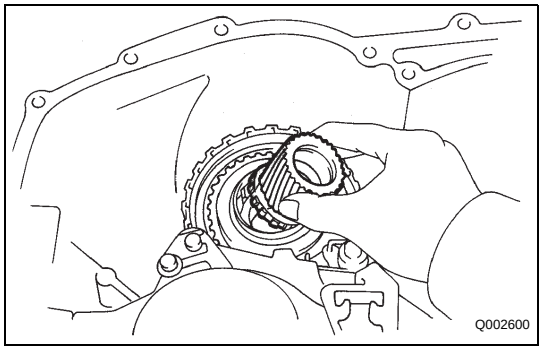

(c) Install the underdrive planetary sun gear sub-assembly to the transaxle case.
(d) Coat the underdrive input shaft needle roller bearing and underdrive input shaft thrust bearing race with petroleum jelly and install it on the transaxle case.

27. INSTALL COUNTER SHAFT ASSEMBLY

(a) Align the flukes of the discs in the underdrive clutch.
(b) Install the needle roller bearing with the bearing facing upward.
Bearing and race:
mm (in.)

	Outer diameter	Inner diameter
Bearing	43.9 mm (1.728 in.)	31.0 mm (1.220 in.)
Race	41.8 mm (1.646 in.)	30.0 mm (1.181 in.)

AX

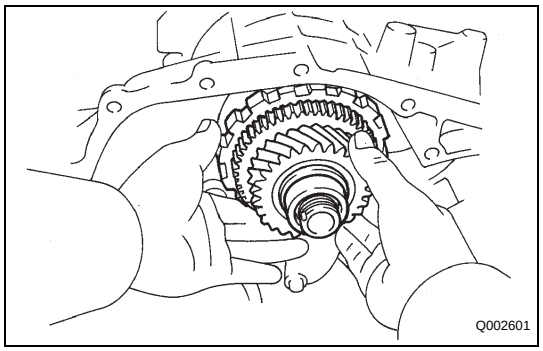

(c) Install the counter shaft assembly to the transaxle case.

28. INSPECT HEIGHT OF COUNTER SHAFT (See page AX-171)

29. INSTALL COUNTER DRIVE GEAR BEARING

(a) Install the new counter drive gear bearing to the counter drive gear.

(b) Install the new snap ring to the counter drive gear bearing.

SST 09350-32014 (09351-32120)

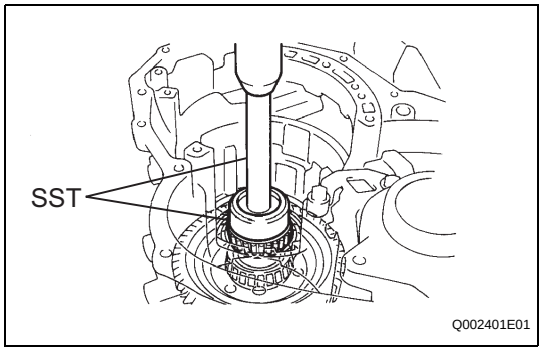

30. INSTALL COUNTER DRIVE GEAR

(a) Using SST and a press, install the counter drive gear.

SST 09350-32014 (09351-32150, 09351-32130)

is manual – you were screwed
more for free using BitTorrent!

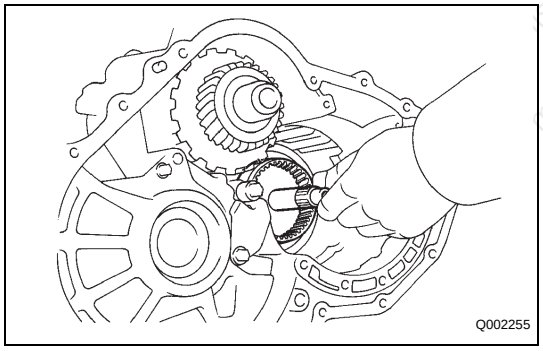

31. INSTALL INTERMEDIATE SHAFT SUB-ASSEMBLY

(a) Install the intermediate shaft sub-assembly to the transaxle case.

AX

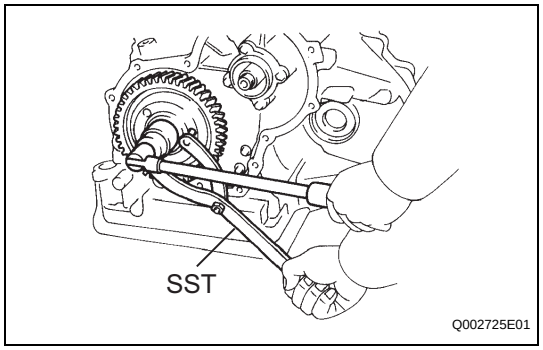

(b) Using SST to hold the counter drive gear, install the new counter drive gear nut.

SST 09960-10010 (09962-01000, 09963-01000)

Torque: 180 N*m (1,835 kgf*cm, 133 ft.*lbf)

32. INSPECT DRIVE GEAR PRELOAD (See page AX-171)

33. TIGHTEN COUNTER DRIVE GEAR NUT

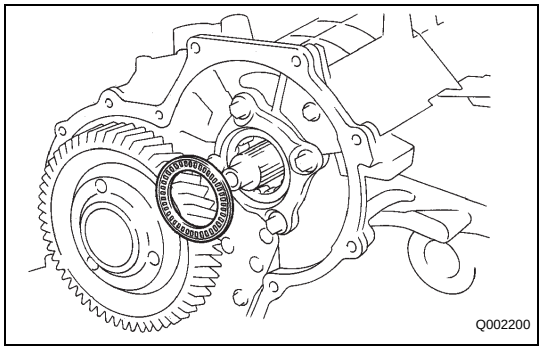

34. INSTALL COUNTER DRIVEN GEAR

(a) Install the thrust needle roller bearing to the transaxle case.

Bearing:

mm (in.)

	Outer diameter	Inner diameter
Bearing	58.0 mm (2.283 in.)	41.0 mm (1.614 in.)

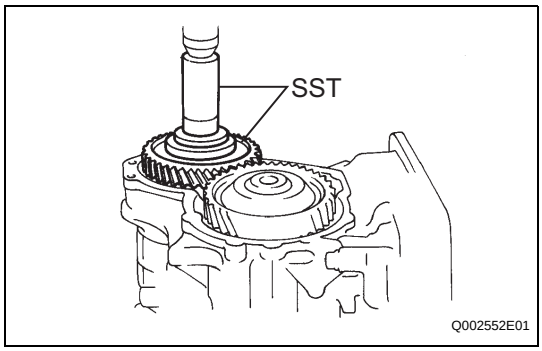

(b) Using SST and a press, press in the counter driven gear.
SST 09350-32014 (09351-32100, 09351-32140)

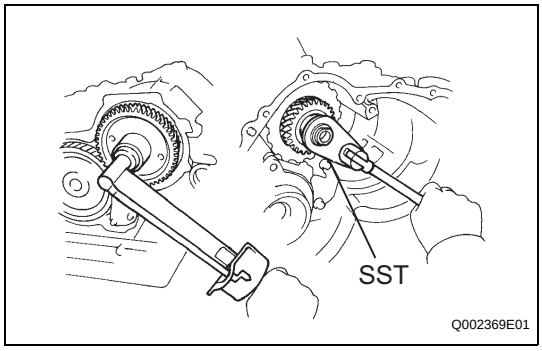

(c) Using SST to hold the counter shaft assembly, tighten a new counter driven gear nut.
SST 09350-32014 (09351-32032)
Torque: 180 N*m (1,835 kgf*cm, 133 ft.*lbf)

35. INSPECT END PLAY OF COUNTER SHAFT (See page AX-172)

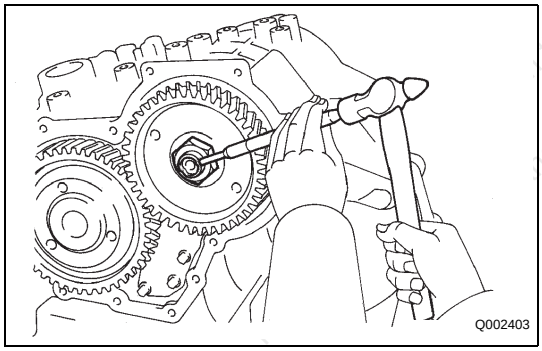

36. TIGHTEN COUNTER DRIVEN GEAR NUT

(a) Using a pin punch and hammer, stake the counter driven gear nut.

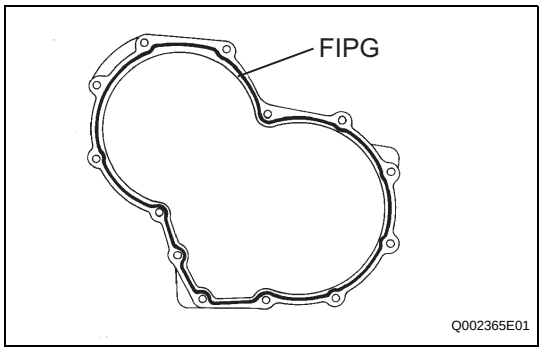

37. INSTALL TRANSMISSION CASE COVER REAR

(a) Remove any packing material and be careful not to get oil on the contacting surfaces of the transmission case cover rear or transaxle case.

(b) Apply FIPG sealant to the transmission case cover rear.
FIPG:
Toyota Genuine Seal Packing 1281, Three Bond 1281 or equivalent

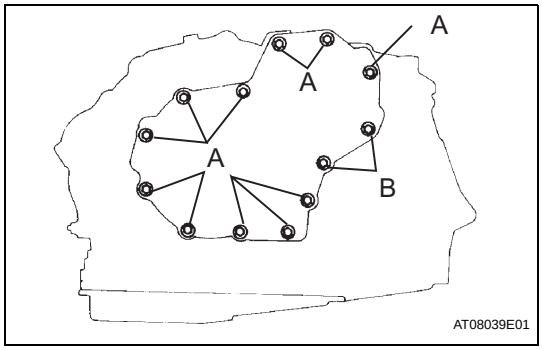

(c) Install and tighten the 13 bolts.
Torque: 10 N*m (102 kgf*cm, 7 ft.*lbf)
HINT:
Each bolt length is indicated in the illustration.
Bolt length:
Bolt A:
25 mm (0.98 in.)
Bolt B:
32 mm (1.26 in.)

38. INSPECT INTERMEDIATE SHAFT SUB-ASSEMBLY (See page AX-172)

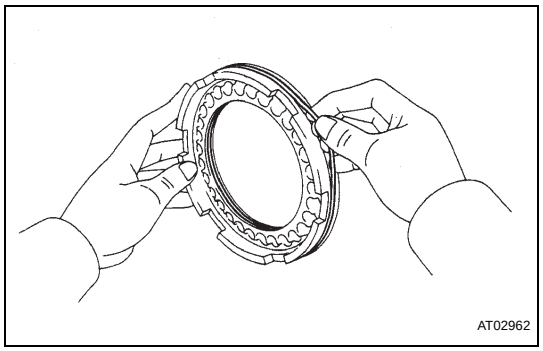

39. INSTALL 1ST AND REVERSE BRAKE PISTON

(a) Coat the 2 new O-rings with ATF and install 2 new O-rings to the 1st & reverse brake piston.

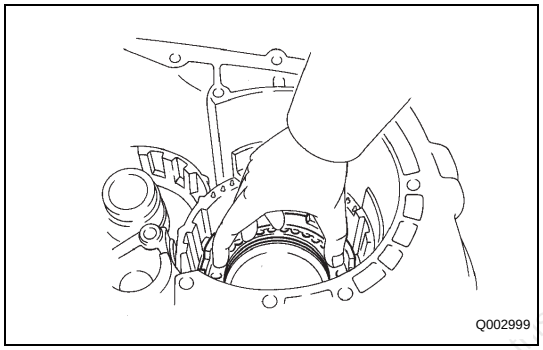

(b) Place the 1st & reverse brake piston into the bore of the case, facing the spring seats upward.
NOTICE:
Be careful not to damage the O-rings.

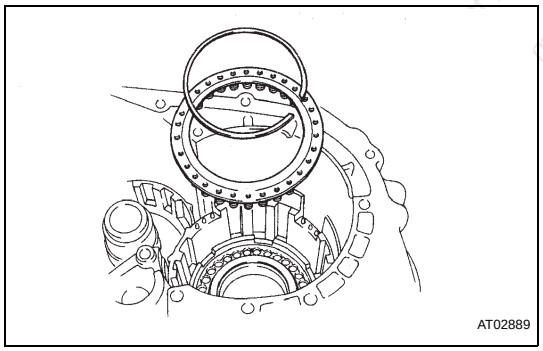

40. INSTALL 1ST AND REVERSE BRAKE RETURN SPRING SUB-ASSEMBLY

(a) Install the 1st & reverse brake return spring sub-assembly and snap ring in place.

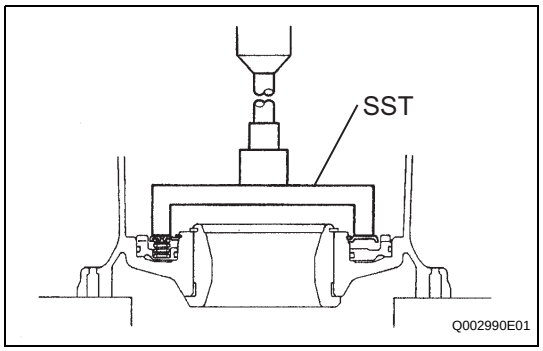

(b) Place SST on the 1st & reverse brake return spring sub-assembly, and compress the 1st & reverse brake return spring sub-assembly with a press.
SST 09350-32014 (09351-32040)

(c) Using snap ring pliers, install the snap ring.
HINT:
Visually check to make sure it is fully seated and centered by the 3 lugs on the spring retainer. Be sure the end gap of snap ring is aligned with the spring retainer claw.

manual – you were
for free using BitTorrent!

AX

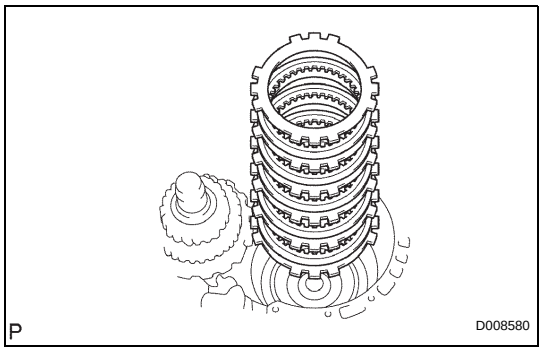

41. INSTALL 1ST AND REVERSE BRAKE CLUTCH DISC

(a) Install the 1st & reverse brake clutch discs and plates in order.
HINT:
6 plates and 6 discs.
Install in order:
D = Disc P = Plate
P - D - P - D - P - D - P - D - P - D - P - D

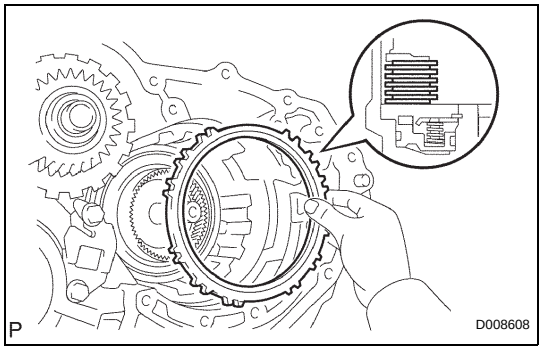

(b) Install the outer flange with the flat side facing downward.

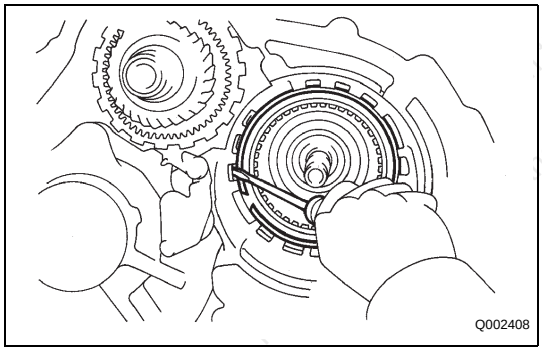

(c) Using a screwdriver, install the snap ring to the transaxle case.
HINT:
Be sure the snap ring end gap is not aligned with one of the cutouts.

42. INSPECT PACK CLEARANCE OF FIRST AND REVERSE BRAKE (See page AX-172)

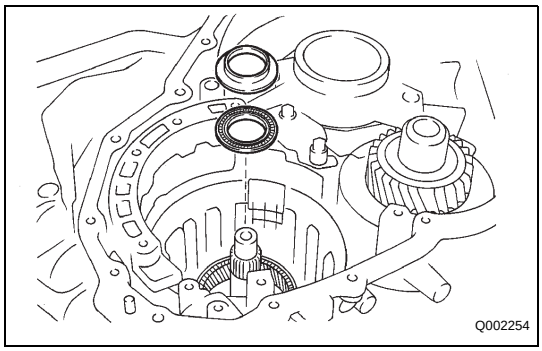

43. INSTALL REAR PLANETARY GEAR ASSEMBLY

(a) Coat the thrust needle roller bearing and thrust bearing race with petroleum jelly and install them on to the intermediate shaft sub-assembly.
Bearing and race:
mm (in.)

	Outer diameter	Inner diameter
Race	37.6 mm (1.480 in.)	24.1 mm (0.949 in.)
Bearing	37.6 mm (1.480 in.)	22.1 mm (0.870 in.)

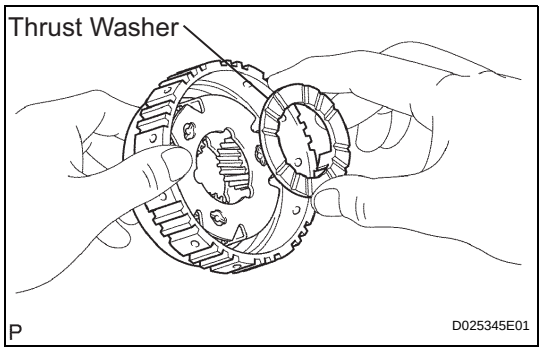

(b) Coat the planetary carrier thrust washer No. 2 with petroleum jelly and install it on to the rear planetary gear assembly.
HINT:
Make sure that the different lug shapes match the corresponding openings on the gear.

this manual – you were screwed!
d more for free using BitTorrent!

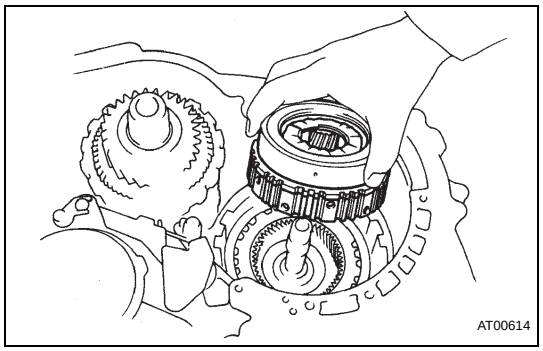

(c) Align the spline of the rear planetary gear assembly with the flukes of the discs and install the rear planetary gear assembly in to the 1st & reverse brake discs.

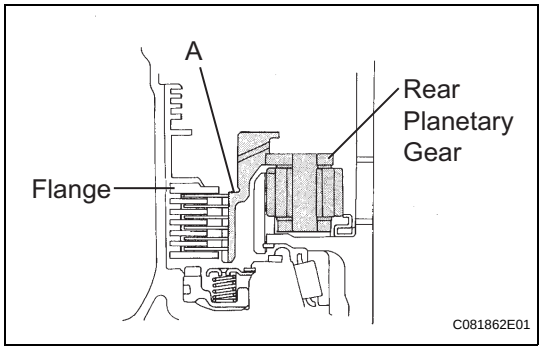

(d) Check the part "A" of the rear planetary gear assembly is below the upper surface of the flange.
SST 09350-32014 (09351-32050)

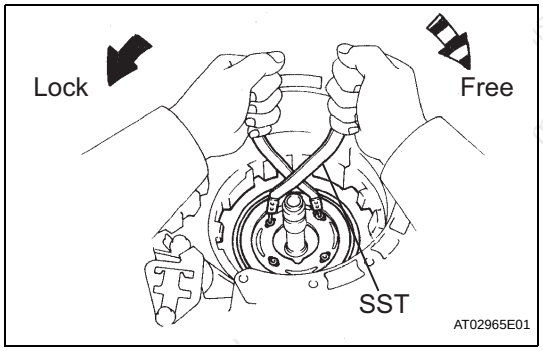

(e) Place the 1 way clutch No. 2 assembly into the case, with the shiny side facing upward.
(f) Install the 1 way clutch No. 2 assembly onto the inner race while turning the rear planetary gear assembly clockwise with SST.
SST 09350-32014 (09351-32050)
(g) Check that the rear planetary gear assembly turns freely clockwise and locks if turned counterclockwise.

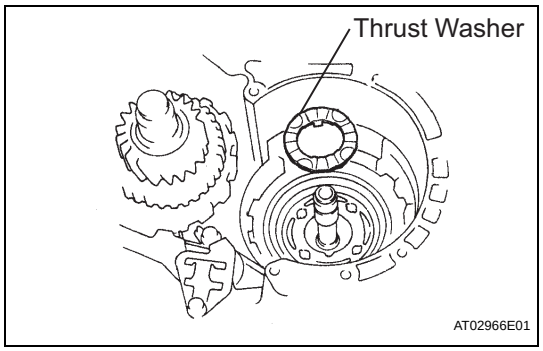

(h) Coat the planetary carrier thrust washer No. 2 with petroleum jelly and install it on to the rear planetary gear assembly.

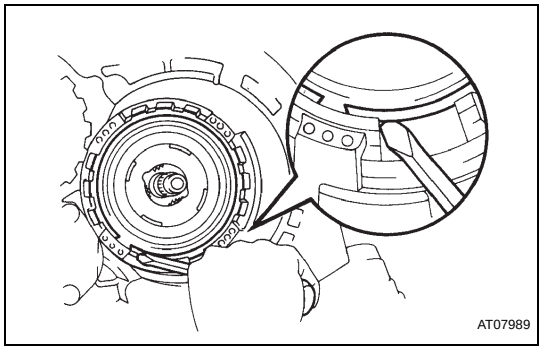

(i) Be sure the end gap of the snap ring is not aligned with one of the cutouts.

is manual – you were screwed!
ore for free using BitTorrent!

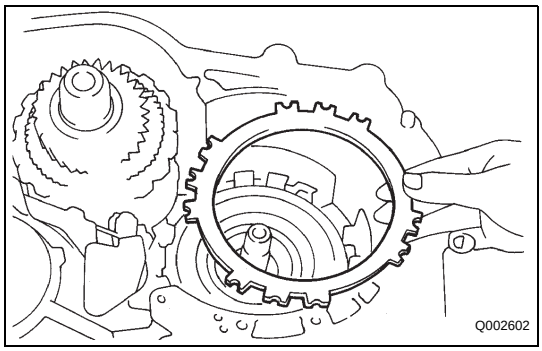

44. INSTALL 2ND BRAKE CLUTCH DISC

(a) Install the flange with the flat side facing upward.

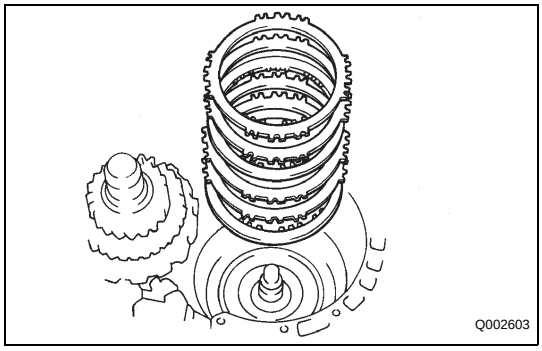

(b) Install the 3 2nd brake clutch discs and 3 plates in order to the transaxle case.
Install in order:
D = Disc P = Plate
D - P - D - P - D - P

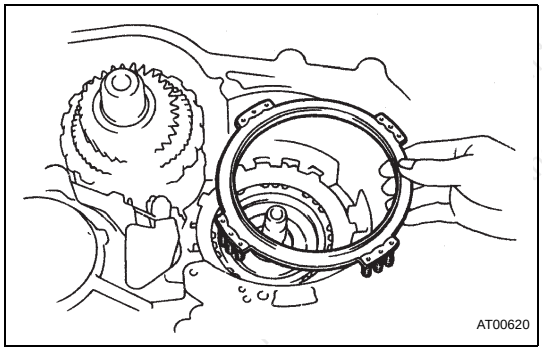

45. INSTALL 2ND BRAKE PISTON RETURN SPRING SUB-ASSEMBLY

(a) Install each of the 2nd brake piston return spring sub-assembly over the protrusions in the transaxle case.

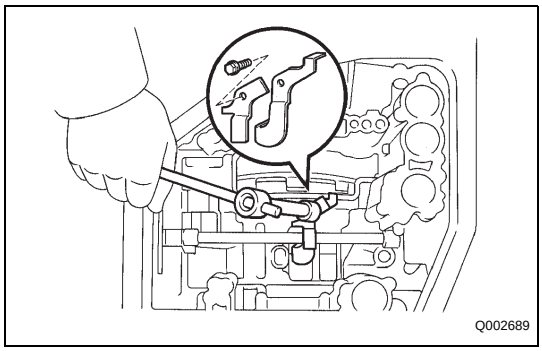

46. INSTALL 2ND COAST BRAKE BAND GUIDE PLATE

(a) Install the 2nd coast brake band guide plate and brake band guide plate retainer so that its tip touches the transaxle case.
(b) Install the bolt.
Torque: 5.5 N*m (56 kgf*cm, 49 in.*lbf)

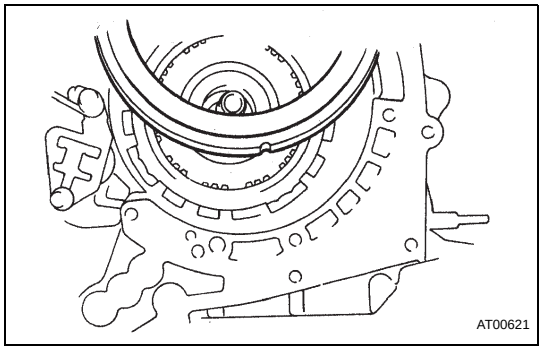

47. INSTALL SECOND BRAKE PISTON ASSEMBLY

(a) Align the groove of the drum with the bolt and place the 2nd brake piston assembly in to the transaxle case.

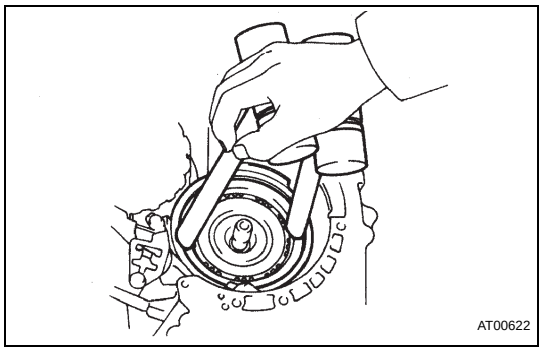

(b) Place both ends of the snap ring in the groove, and then set the snap ring in to the transaxle case.

(c) While compressing the piston return springs over the drum with hammer handles, install the snap ring.
HINT:
Be sure the end gap of the snap ring is not aligned with one of the cutouts.

48. INSPECT 2ND BRAKE PISTON (See page AX-172)

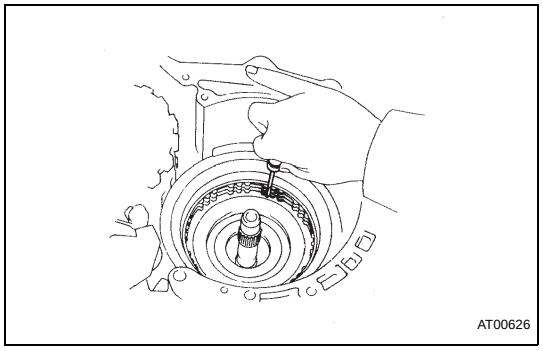

49. INSTALL 1 WAY CLUTCH ASSEMBLY

(a) Using a screwdriver, align the flukes of the discs in the 2nd brake.

is manual – you were screwed!
more for free using BitTorrent!

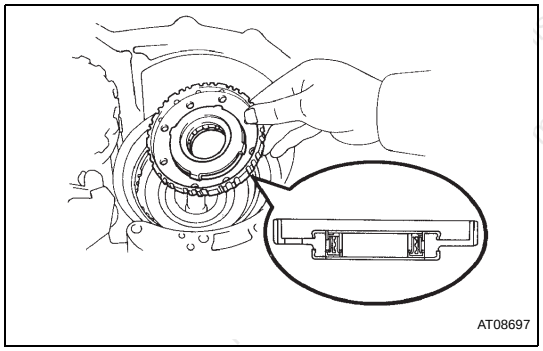

(b) Align the spline of the 1 way clutch assembly with the flukes of the discs and install the 1 way clutch assembly to the 2nd brake discs.

50. INSPECT 2ND BRAKE HUB INSTALLATION DISTANCE (See page AX-172)

AX

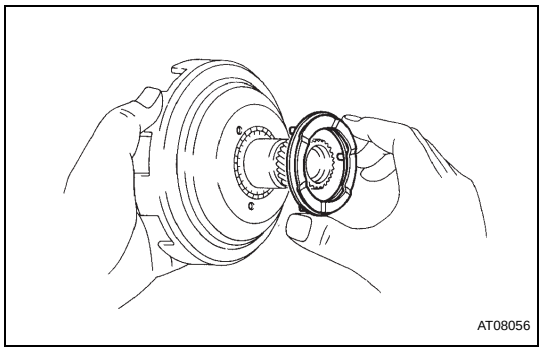

51. INSTALL SUN GEAR INPUT DRUM ASSEMBLY

(a) Coat the planetary carrier thrust washer No. 3 with petroleum jelly and install it on the planetary sun gear sub-assembly.

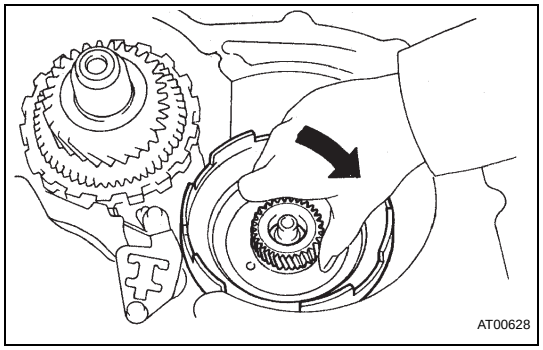

(b) By turning the planetary sun gear sub-assembly clockwise, install it in to the 1 way clutch assembly.

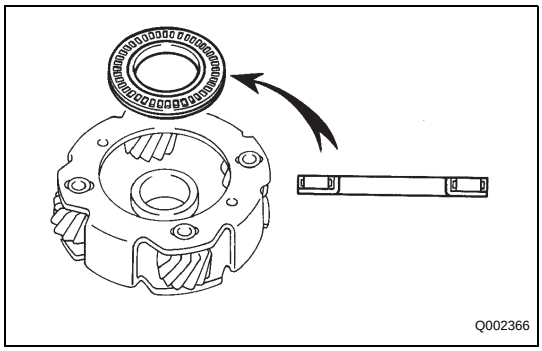

52. INSTALL FRONT PLANETARY GEAR ASSEMBLY

(a) Coat the thrust needle roller bearing with petroleum jelly and install it on to the front planetary gear assembly.

Bearing:
mm (in.)

	Outer diameter	Inner diameter
Bearing	45.0 mm (1.772 in.)	28.1 mm (1.106 in.)

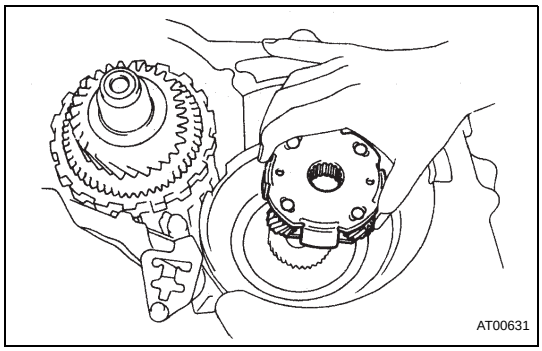

(b) Install the front planetary gear assembly.

this manual – you were screwed!
nd more for free using BitTorrent!

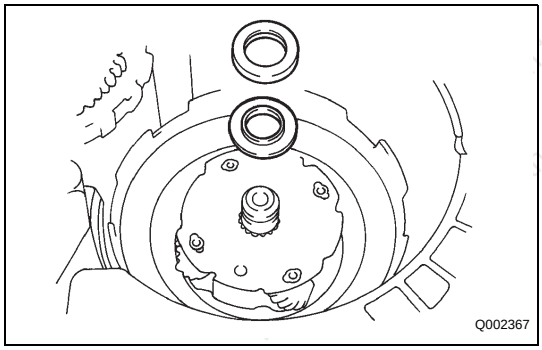

53. INSTALL FRONT PLANETARY RING GEAR

(a) Coat the thrust needle roller bearing and thrust bearing race with petroleum jelly and install them onto the front planetary gear assembly.

Bearing and race:
mm (in.)

	Outer diameter	Inner diameter
Race	35.0 mm (1.378 in.)	19.0 mm (0.748 in.)
Bearing	38.0 mm (1.496 in.)	22.0 mm (0.866 in.)

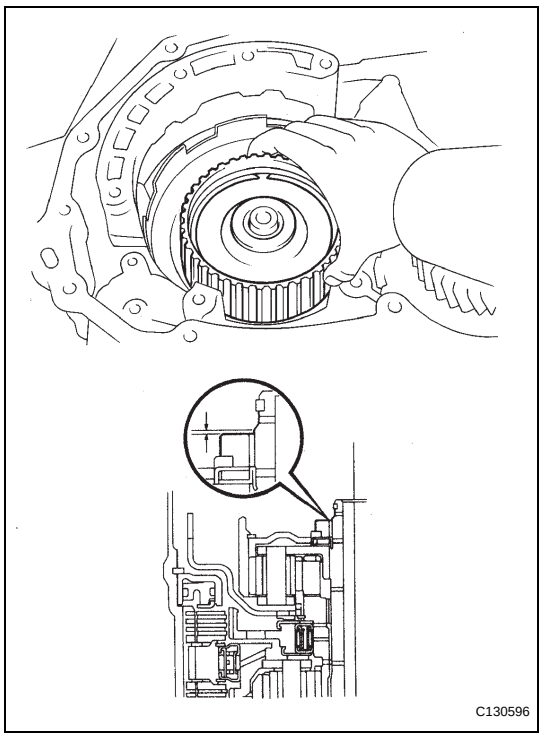

(b) Install the front planetary ring gear to the transaxle case.

HINT:
If the front planetary ring gear and the other parts are installed correctly into the case, the end of the bushing with the ring gear flange will be flush with or under the shoulder of the intermediate shaft.

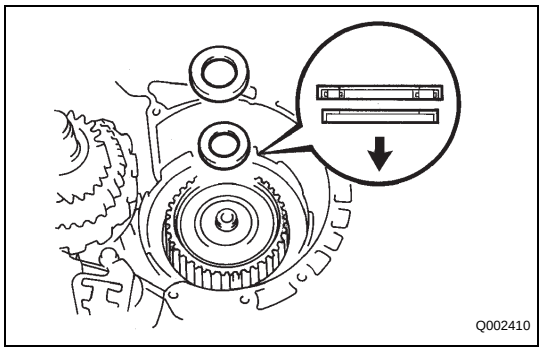

(c) Coat the thrust needle roller bearing and thrust bearing race with petroleum jelly and install them on to the tip of ring gear flange.
Bearing and race:
mm (in.)

	Outer diameter	Inner diameter
Race	39.5 mm (1.555 in.)	26.0 mm (1.024 in.)
Bearing	42.0 mm (1.654 in.)	25.8 mm (1.016 in.)

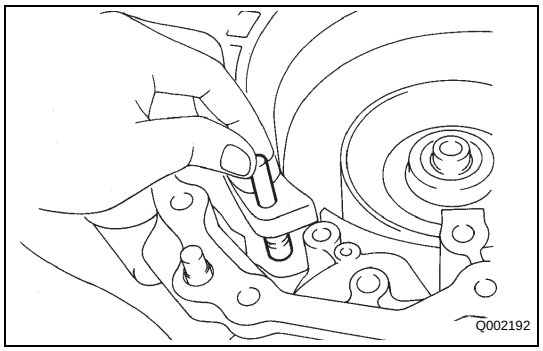

54. INSTALL 2ND COAST BRAKE BAND ASSEMBLY

(a) Place the 2nd coast brake band assembly in to the transaxle case.
(b) Install the pin to the transaxle case.

is manual – you were screwed
more for free using BitTorrent!

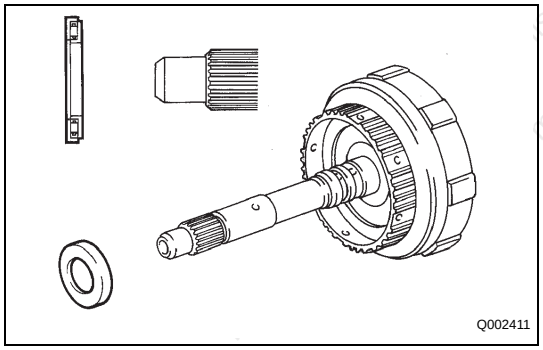

55. INSTALL INPUT SHAFT ASSEMBLY

(a) Coat the thrust needle roller bearing with petroleum jelly and install it onto the forward clutch assembly.
Assembled bearing and race:
mm (in.)

	Outer diameter	Inner diameter
Assembled bearing and race	46.0 mm (1.811 in.)	30.7 mm (1.209 in.)

AX

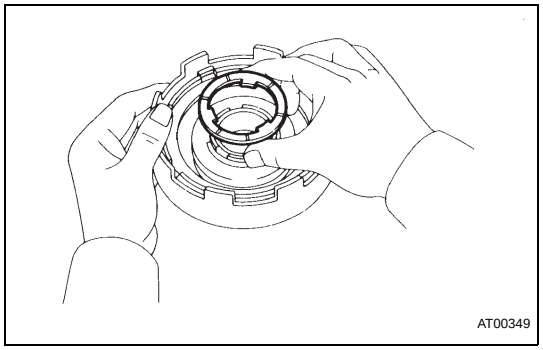

(b) Coat the clutch drum thrust washer with petroleum jelly and install it onto the direct clutch drum with the oil groove facing upward.

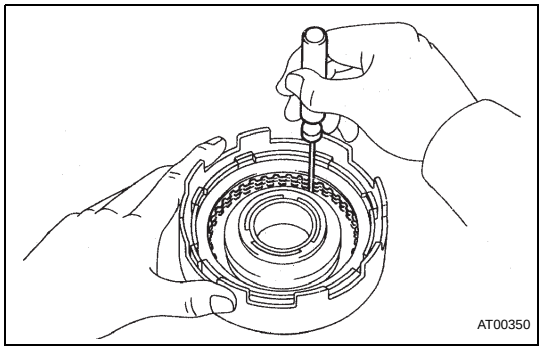

(c) Using a screwdriver, align the flukes of the discs in the direct clutch.

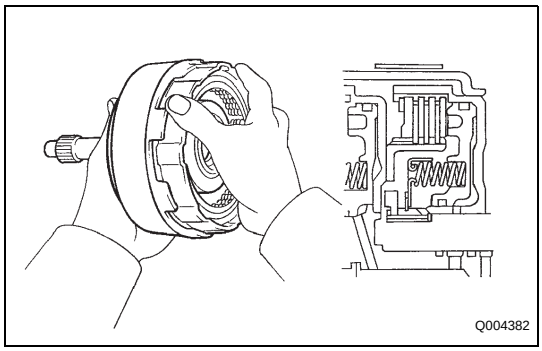

(d) Mesh the hub with the flukes of the direct clutch while turning the clutch drum or forward clutch.
HINT:
If the flukes of the discs are meshed correctly, the end of the bushing with the direct clutch will be flush with the surfaces of the forward clutch.

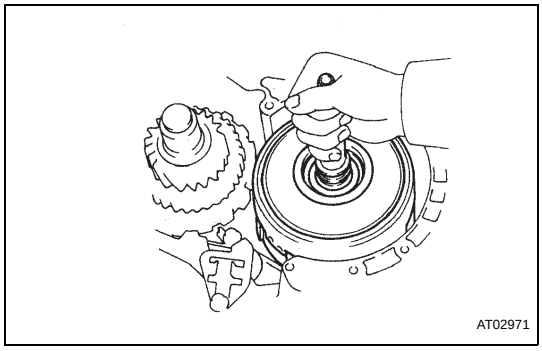

(e) Place the direct clutch assembly and forward clutch assembly in to the transaxle case.
(f) While rotating the forward clutch assembly to mesh the front planetary ring gear and discs, install them.

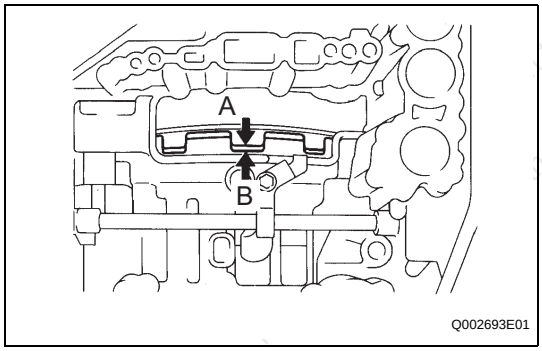

(g) Check the distance between A and B.
Distance:
Approx. 3 mm (0.118 in.)

this manual – you were screwed
you more for free using BitTorrent!

AX

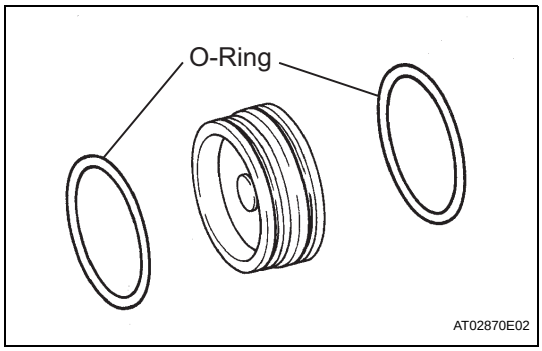

56. INSTALL 2ND COAST BRAKE PISTON

(a) Coat the 2 new O-rings with ATF and install the 2 O-rings to the 2nd coast brake cover.

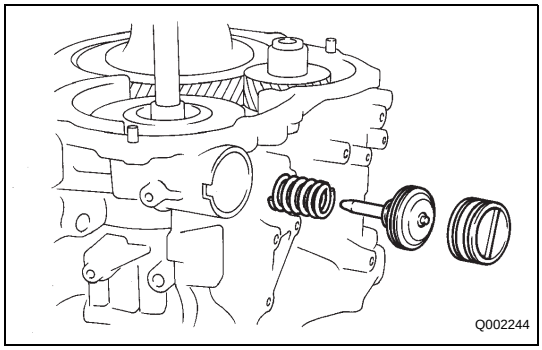

(b) Install the compression spring, 2nd coast brake piston and 2nd coast brake cover in to the bore.

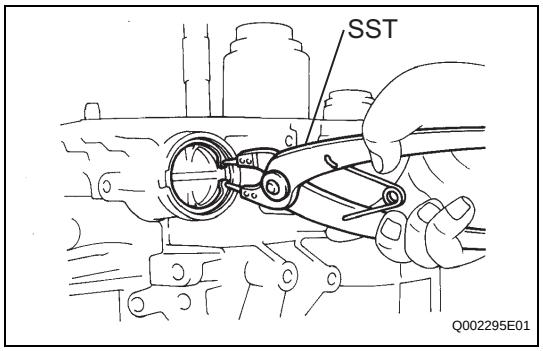

(c) Using SST, install the snap ring.
SST 09350-32014 (09351-32050)

57. INSPECT PISTON STROKE OF 2ND COAST BRAKE
(See page AX-173)

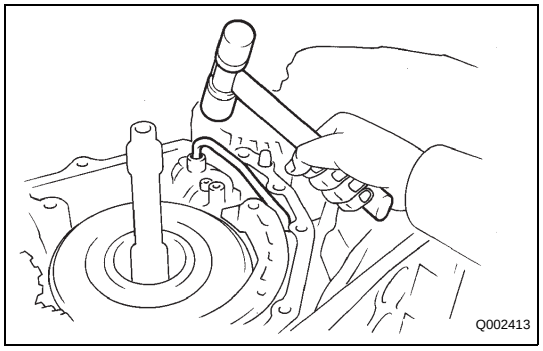

58. INSTALL GOVERNOR PRESSURE TUBE

(a) Using a plastic hammer, install the governor pressure tube to the transaxle case.
NOTICE:
Be careful not to bend or damage the tube.

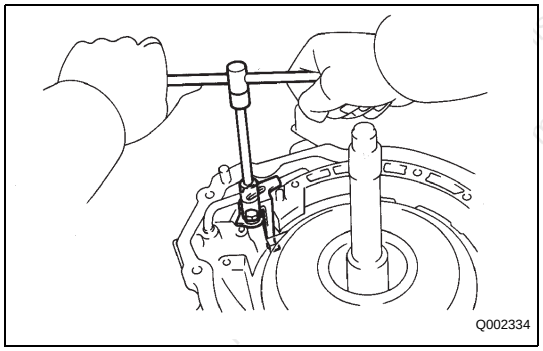

59. INSTALL TRANSAXLE APPLY TUBE CLAMP NO.3

(a) Install the transaxle apply tube clamp No. 3 with the bolt.
Torque: 5.5 N*m (56 kgf*cm, 49 in.*lbf)

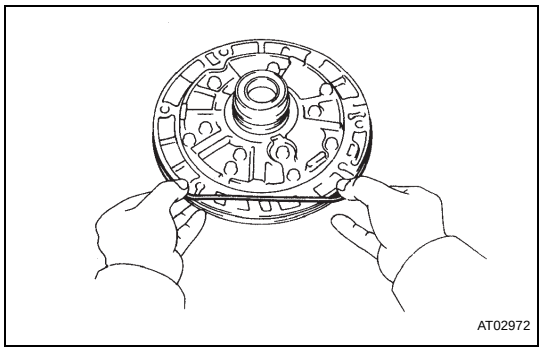

60. INSTALL OIL PUMP ASSEMBLY

(a) Coat a new O-ring with ATF and install it to the oil pump assembly.

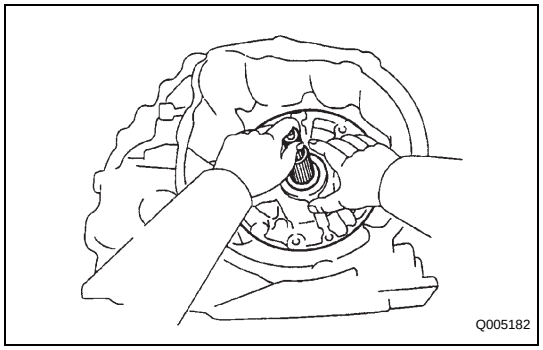

(b) Place the oil pump assembly through the input shaft, and align the bolt holes of the pump body with those of the transaxle case.

(c) Hold the input shaft, and lightly press the oil pump body to slide the oil seal rings on the input shaft through the direct clutch drum.
NOTICE:
Do not push on the oil pump strongly, or the oil seal ring will stick to the direct clutch drum.

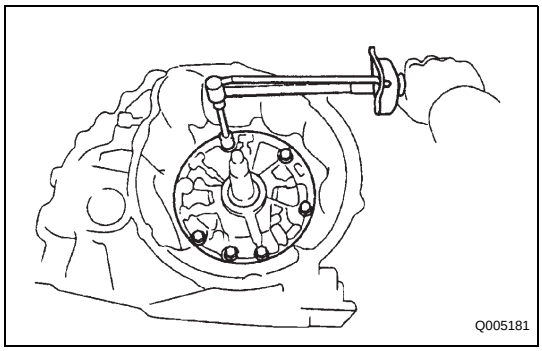

(d) Install the 6 bolts.
Torque: 25 N*m (255 kgf*cm, 18 ft.*lbf)

61. INSPECT INPUT SHAFT ASSEMBLY (See page AX-173)

62. INSPECT INPUT SHAFT ENDPLAY (See page AX-173)

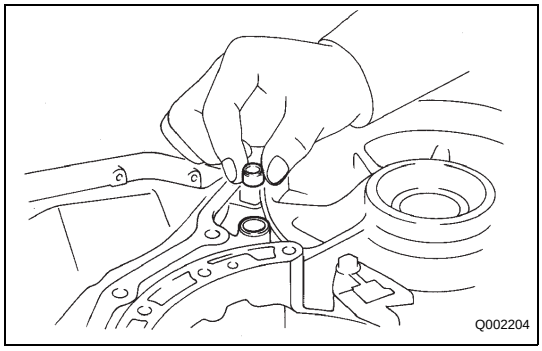

63. INSTALL GOVERNOR APPLY GASKET NO.2
(a) Install the governor apply gasket No. 2 to the transaxle case.

64. INSTALL TRANSMISSION CASE PLATE NO.1
(a) Install the transmission case plate No. 1 with the bolt.
Torque: 10 N*m (102 kgf*cm, 7 ft.*lbf)

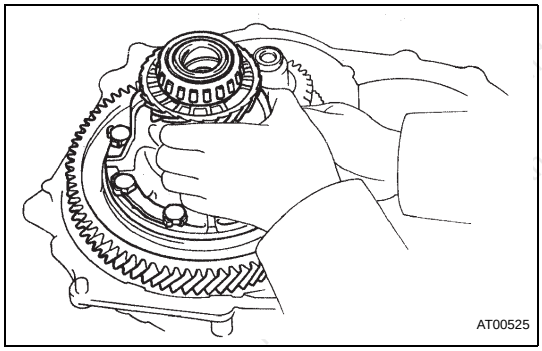

65. INSTALL FRONT DIFFERENTIAL ASSEMBLY
(a) Install the front differential assembly to the transaxle case.

AX

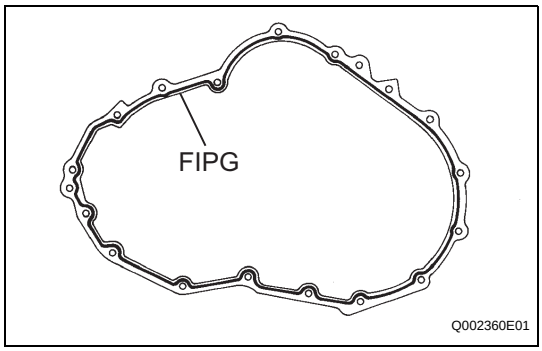

66. INSTALL TRANSAXLE HOUSING
(a) Remove any packing material and be careful not to get oil on the contacting surfaces of the transaxle housing or transaxle case.
(b) Apply FIPG to the transaxle housing.
FIPG:
Toyota Genuine Seal Packing 1281, Three Bond 1281 or equivalent

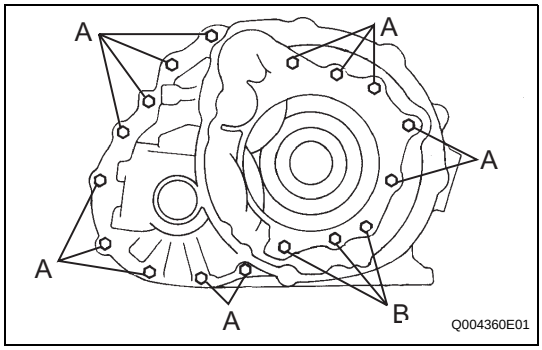

(c) Apply adhesive to the bolt B threads.
Adhesive:
Toyota Genuine Adhesive 1344, Three Bond 1344 or equivalent
(d) Install the 17 bolts.
Torque: 30 N*m (304 kgf*cm, 22 ft.*lbf)
HINT:
Each bolt length is indicated in the illustration.
Bolt length:
Bolt A:
30 mm (1.18 in.)

Bolt B:
35 mm (1.38 in.)

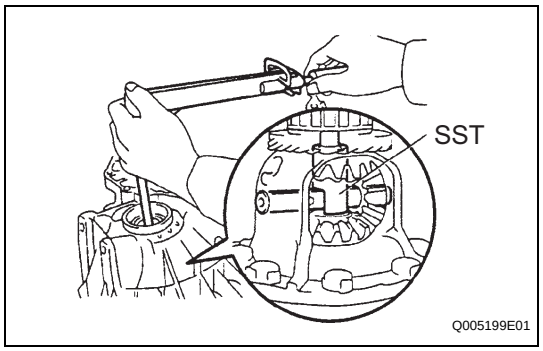

67. ADJUST DIFFERENTIAL SIDE BEARING PRELOAD

(a) Using SST, rotate the differential in both directions to snug the bearing down.
SST 09564-32011

(b) Using SST and a torque wrench, measure the preload of the side bearing.
SST 09564-32011
Torque: New bearing preload (at starting)
0.8 to 1.4 N*m (8 to 14 kgf*cm, 7.1 to 12.4 in.*lbf)
Used bearing preload (at starting)
0.4 to 0.7 N*m (4 to 7 kgf*cm, 3.5 to 6.2 in.*lbf)

If the preload is not within the specified range, remove the differential from the transaxle case. Re-select the transaxle case side adjusting shim according to the following table.

Adjusting shim thickness:
mm (in.)

Thickness	Thickness	Thickness
2.00 mm (0.0787 in.)	2.05 mm (0.0807 in.)	2.10 mm (0.0827 in.)
2.15 mm (0.0846 in.)	2.20 mm (0.0866 in.)	2.25 mm (0.0886 in.)
2.30 mm (0.0906 in.)	2.35 mm (0.0925 in.)	2.40 mm (0.0945 in.)
2.45 mm (0.0965 in.)	2.50 mm (0.0984 in.)	2.55 mm (0.1004 in.)
2.60 mm (0.1024 in.)	2.65 mm (0.1043 in.)	2.70 mm (0.1063 in.)
2.75 mm (0.1083 in.)	2.80 mm (0.1102 in.)	2.85 mm (0.1122 in.)
2.90 mm (0.1142 in.)	2.95 mm (0.1161 in.)	3.00 mm (0.1181 in.)

If you paid for the content in this manual – you should not pay for it
Download this and more from www.mechanic-manual.com

AX

HINT:
The preload will change about 0.3 to 0.4 N*m (3 to 4 kgf*cm, 2.6 to 3.5 in.*lbf) according to a change in shim thickness of 0.05mm (0.0020 in.)

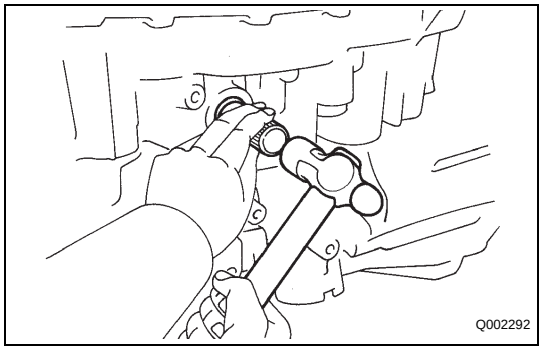

68. INSTALL MANUAL VALVE LEVER SHAFT

(a) Using a 14 mm (0.55 in.) socket wrench and hammer, drive in a new manual valve lever shaft oil seal.

(b) Apply MP grease to the seal lip.

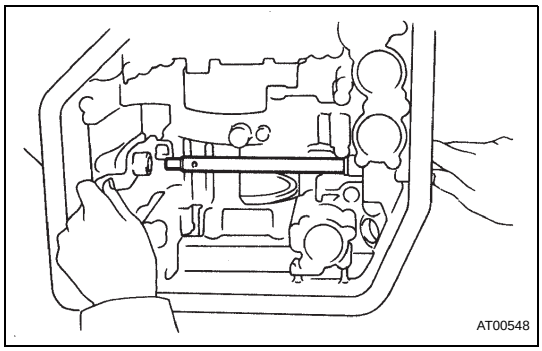

(c) Install the parking lock rod sub-assembly to the manual valve lever sub-assembly.
(d) Slide in the manual valve lever shaft and install the washer plate, a new spacer and manual valve lever sub-assembly.

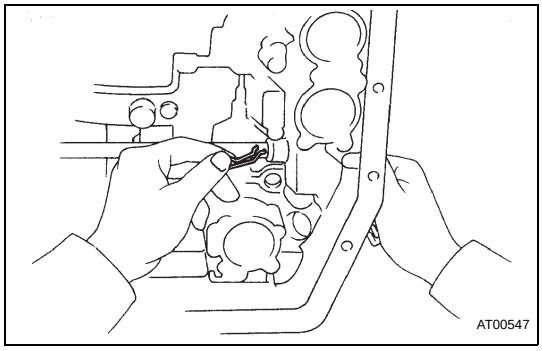

(e) Install the retainer spring.
HINT:
Make sure there is a washer between the retaining spring and case.

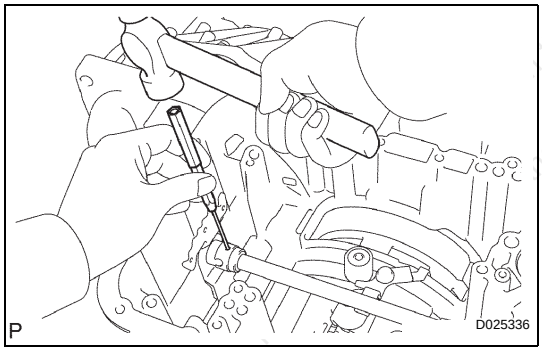

(f) Using a pin punch and hammer, drive in the slotted spring pin.
(g) Position the spacer and stake it.

this manual – you were screwed
you more for free using BitTorrent!

AX

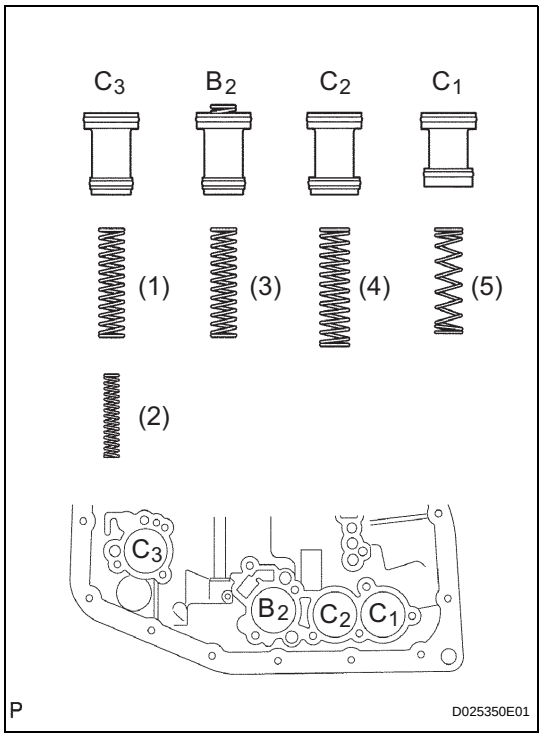

69. INSTALL ACCUMULATOR PISTON AND SPRING

(a) Coat 8 new O-rings with ATF and install them to the accumulator pistons 2 each.
(b) Install the accumulator pistons and compression springs to the transaxle case as shown in the illustration.

Spring		Free length	Color
(1) C_3	(Outer)	68.4 mm (2.693 in.)	Yellow
(2) C_3	(Inner)	50 mm (1.968 in.)	Yellow
(3) B_2		64.68 mm (2.546 in.)	Light blue
(4) C_2		70.45 mm (2.773 in.)	Purple
(5) C_1	(Outer)	60.39 mm (2.378 in.)	Pink

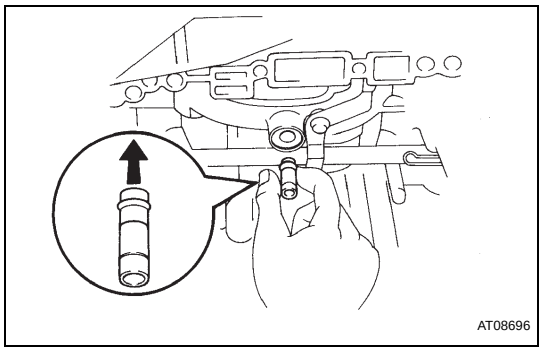

70. INSTALL BRAKE DRUM GASKET

(a) Install a new brake drum gasket until it makes contact with the 2nd brake drum.

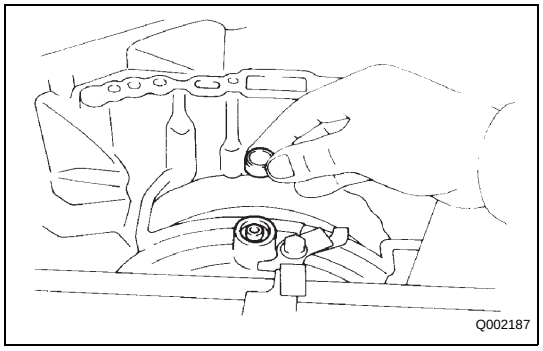

71. INSTALL GOVERNOR APPLY GASKET NO.1

(a) Install the new governor apply gasket No. 1 to the transaxle case.

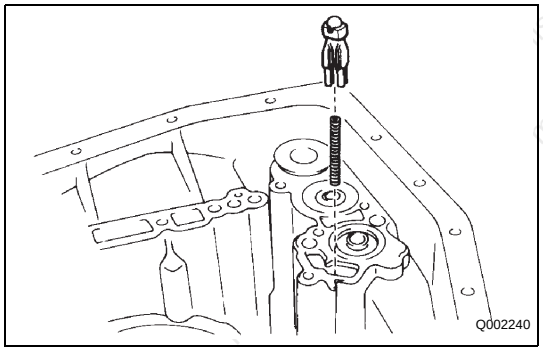

72. INSTALL CHECK BALL BODY

(a) Install the check ball body and compression spring to the transaxle case.

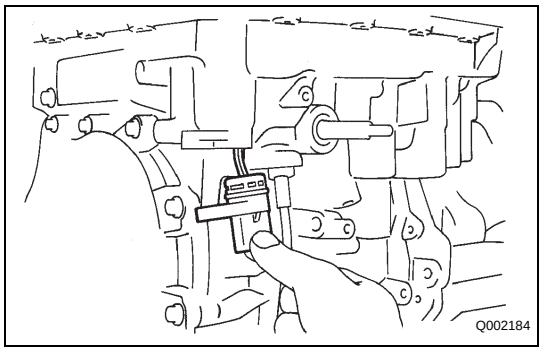

73. INSTALL TRANSMISSION WIRE

(a) Coat a new O-ring with ATF and install the transmission wire to the transaxle case.

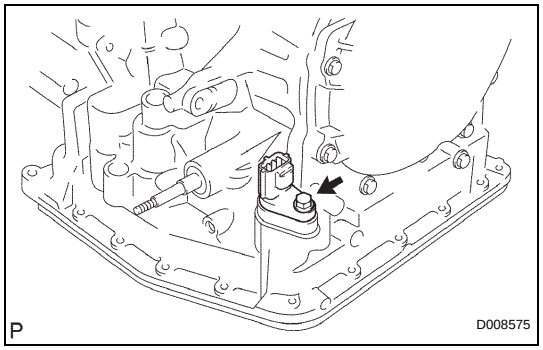

(b) Install the bolt.
Torque: 5.5 N*m (56 kgf*cm, 49 in.*lbf)

is manual – you were screwed!
more for free using BitTorrent!

AX

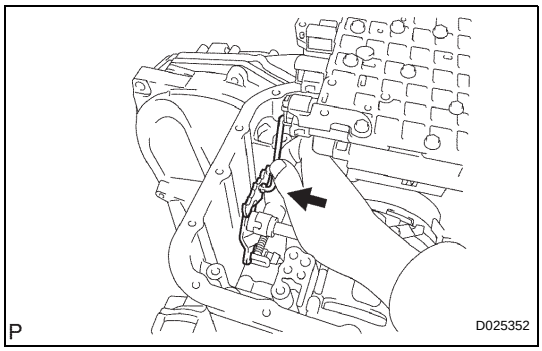

74. INSTALL TRANSMISSION VALVE BODY ASSEMBLY

(a) Connect the manual valve connecting rod to the manual valve lever.

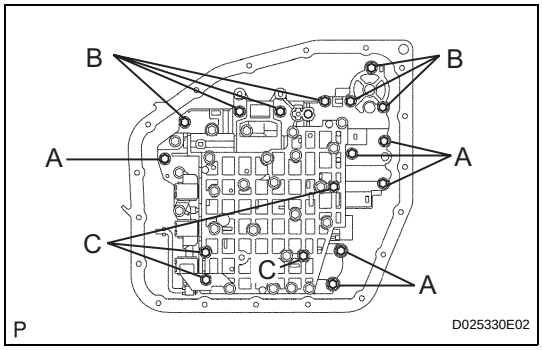

(b) Install the transmission valve body assembly with the 17 bolts.
HINT:
Each bolt length is indicated in the illustration.
Torque: 10 N*m (102 kgf*cm, 7 ft.*lbf)
Bolt length:
Bolt A:
20 mm (0.79 in.)
Bolt B:
28 mm (1.10 in.)
Bolt C:
50 mm (1.97 in.)

(c) Connect the solenoid connectors.

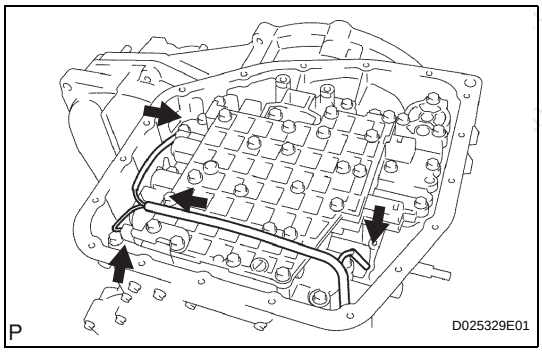

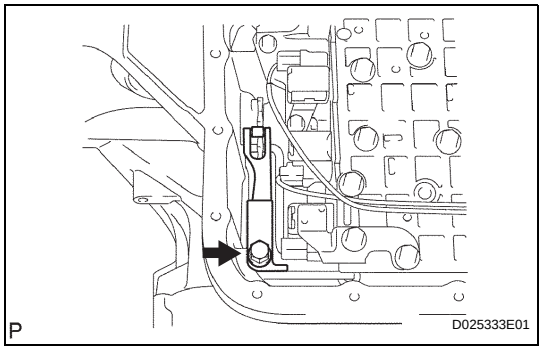

75. INSTALL MANUAL DETENT SPRING SUB-ASSEMBLY

(a) Install the manual detent spring sub-assembly and manual detent spring cover with the bolt.
Torque: 10 N*m (102 kgf*cm, 7 ft.*lbf)

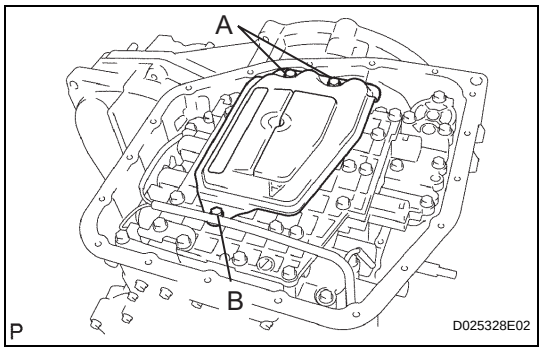

76. INSTALL VALVE BODY OIL STRAINER ASSEMBLY

(a) Install the valve body oil strainer assembly and a new oil strainer gasket with the 3 bolts.
HINT:
Each bolt length is indicated in the illustration.
Torque: 10 N*m (102 kgf*cm, 7 ft.*lbf)
Bolt length:
Bolt A:
12 mm (0.47 in.)
Bolt B:
20 mm (0.79 in.)

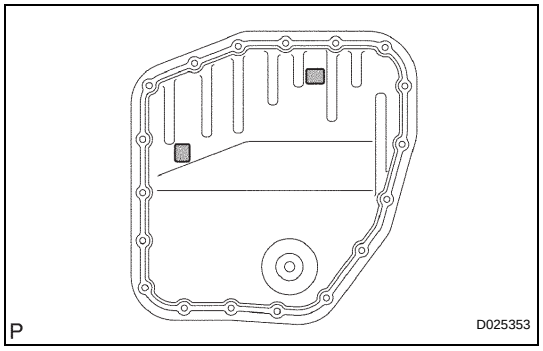

77. INSTALL TRANSMISSION OIL CLEANER MAGNET

(a) Install the 2 transmission oil cleaner magnets to the automatic oil pan sub-assembly.

s manual – you were screwed!
more for free using BitTorrent!

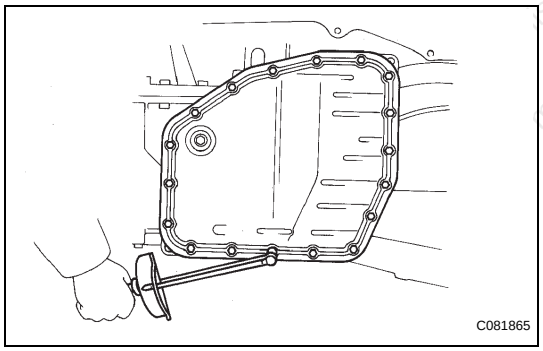

78. INSTALL AUTOMATIC TRANSAXLE OIL PAN SUB-ASSEMBLY

(a) Install a new automatic transaxle oil pan gasket to the automatic transaxle oil pan sub-assembly and install them to the transaxle.

(b) Tighten the 18 bolts.
Torque: 5.3 N*m (54 kgf*cm, 47 in.*lbf)

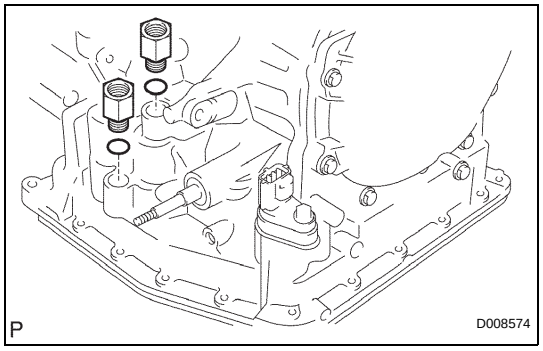

79. INSTALL OIL COOLER TUBE UNION

(a) Coat 2 new O-rings with ATF and install 2 new O-rings to the 2 oil cooler tube unions.

(b) Install the 2 oil cooler tube unions to the transaxle case.
Torque: 30 N*m (304 kgf*cm, 22 ft.*lbf)

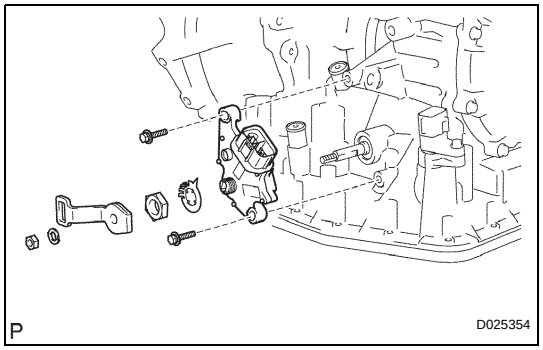

80. INSTALL PARK/NEUTRAL POSITION SWITCH ASSEMBLY

(a) Install the park / neutral position switch assembly to the manual valve lever shaft.

(b) Place a new lock washer and tighten the nut.
Torque: 12 N*m (122 kgf*cm, 8 ft.*lbf)

(c) Temporarily install the 2 bolts.

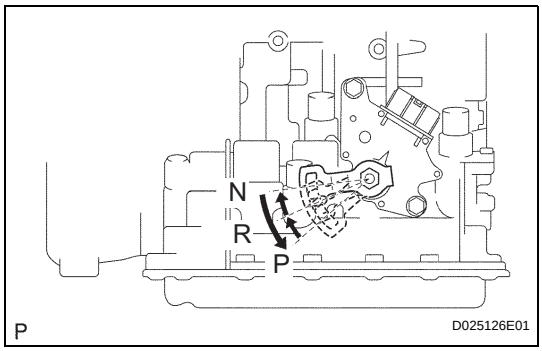

(d) Temporarily install the transmission control shift lever.
(e) Turn the lever counterclockwise until it stops, then turn it clockwise 2 notches.
(f) Remove the transmission control shift lever.

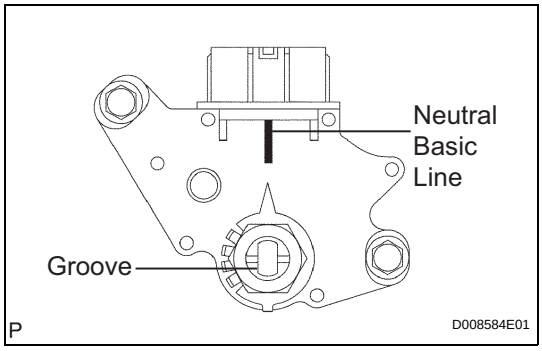

(g) Align the groove with neutral basic line.
(h) Tighten the 2 bolts.
Torque: 5.5 N*m (56 kgf*cm, 49 in.*lbf)

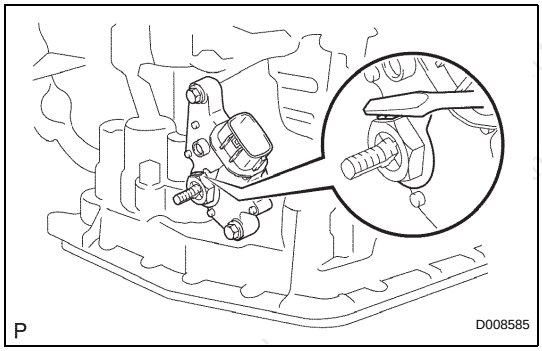

(i) Using a screwdriver, stake the nut with the lock washer.

81. INSTALL TRANSMISSION CONTROL SHAFT LEVER
(a) Install the transmission control shaft lever with the nut and washer.
Torque: 12 N*m (122 kgf*cm, 8 ft.*lbf)

82. INSTALL TRANSAXLE CASE NO.1 PLUG
(a) Install the transaxle case No. 1 plug and a new O-ring to the transaxle case.

83. INSTALL BREATHER PLUG NO.1 (ATM)
(a) Install the breather plug No. 1 and a new O-ring to the transaxle case.

84. INSTALL BREATHER PLUG HOSE

this manual – you were screwed!
you more for free using BitTorrent!